CD100002854 PCB.SchDoc

FID1 Fiducial — Fiducials
FID2 Fiducial — Fiducials
FID3 Fiducial — Fiducials
FID4 Fiducial — Fiducials

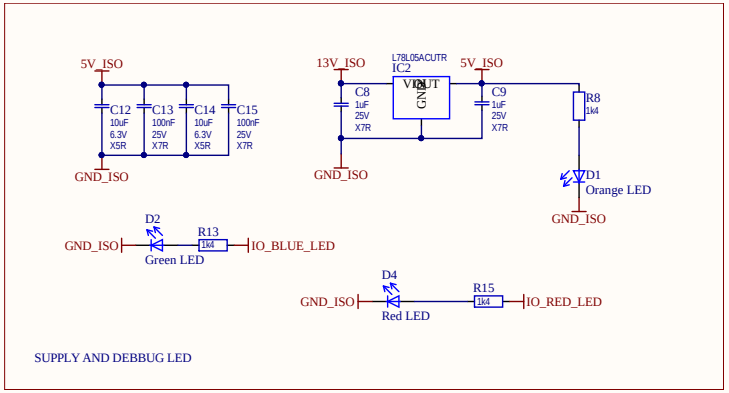

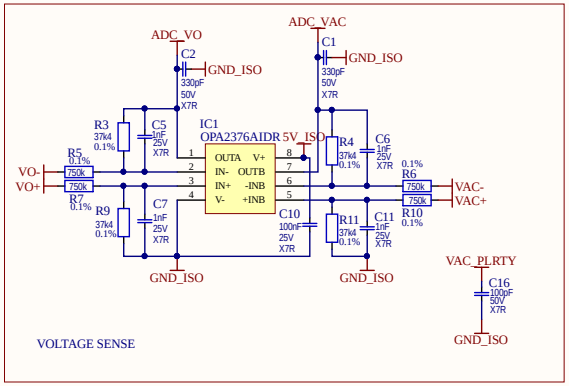

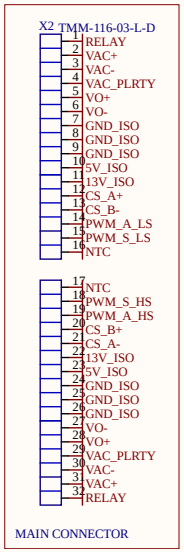

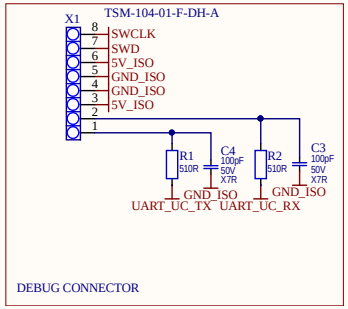

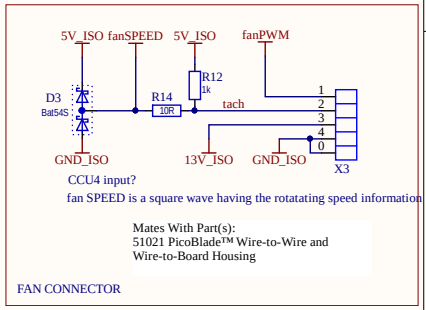

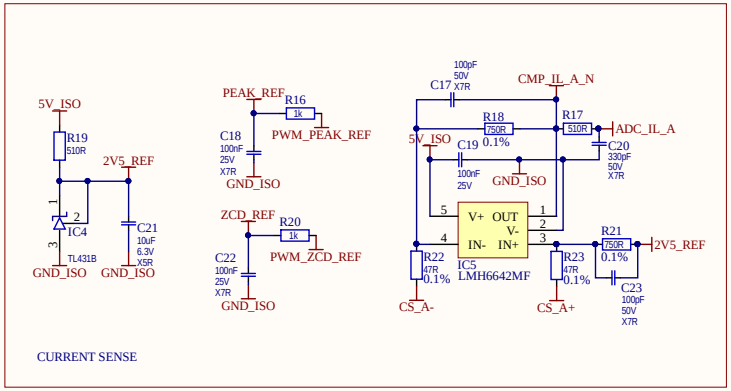

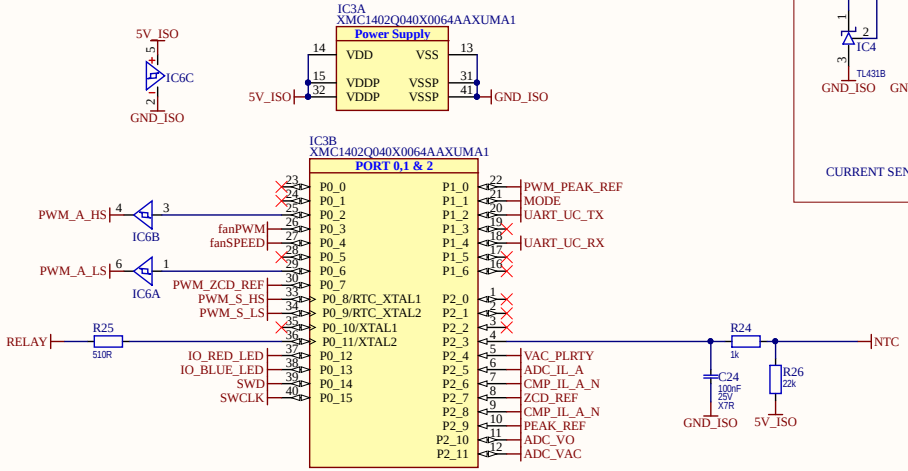

Infineon Technologies Austria AG assumes no liability for re-use, application, customer product design or infringement of patents related to the present material.
and is not considered by Infineon Technologies Austria AG to be part of a finished end product for general consumer uses.
This Evaluation Board/Kit/Module/Layout is intended for use for ENGINEERING DEVELOPMENT, DEMONSTRATION, OR EVALUATION PURPOSES ONLY

IFAT PSS EPIC HVC TM SAE
Infineon Technologies Austria AG
Siemensstraße 2, 9500 Villach, Österreich

Title	EVAL_3K3W_TP_PFC_CC Control Card
Variant	[No Variations]
Author:	Matteo-Alessandro Kutschak; David Meneses
Date:	31.05.2021 Time: 13:59:55
Copyright	Infineon Technologies Austria AG
Sheet	1 of 1